TrynEx International, LLC, 531 Ajax Drive, Madison Heights, MI 48071-2429 • www.snowexproducts.com

October 15, 2026
Lit. No. 94117, Rev. 05

SnowEx®

Automatixx®
ATTACHMENT SYSTEM

6800, 7200

Light Truck Snowplow

Blade Assembly 77700, 77705
Big Box Assembly 77800-1, 77800-3

Parts List

AUTHENTIC SnowEx® PARTS & ACCESSORIES

A DIVISION OF DOUGLAS DYNAMICS, LLC

TABLE OF CONTENTS

LIGHT TRUCK BLADE ASSEMBLY 4

A-FRAME ASSEMBLY 6

HEADGEAR ASSEMBLY 8

HYDRAULIC AND ELECTRICAL COMPONENTS 10

- Hydraulic Unit 10
- Lift and Angle Rams 12
- Hoses and Fittings 13
- Electrical Components 14

VEHICLE-SIDE HARNESS DIAGRAM 15

HEADLAMP KITS 16–17

Blade Components

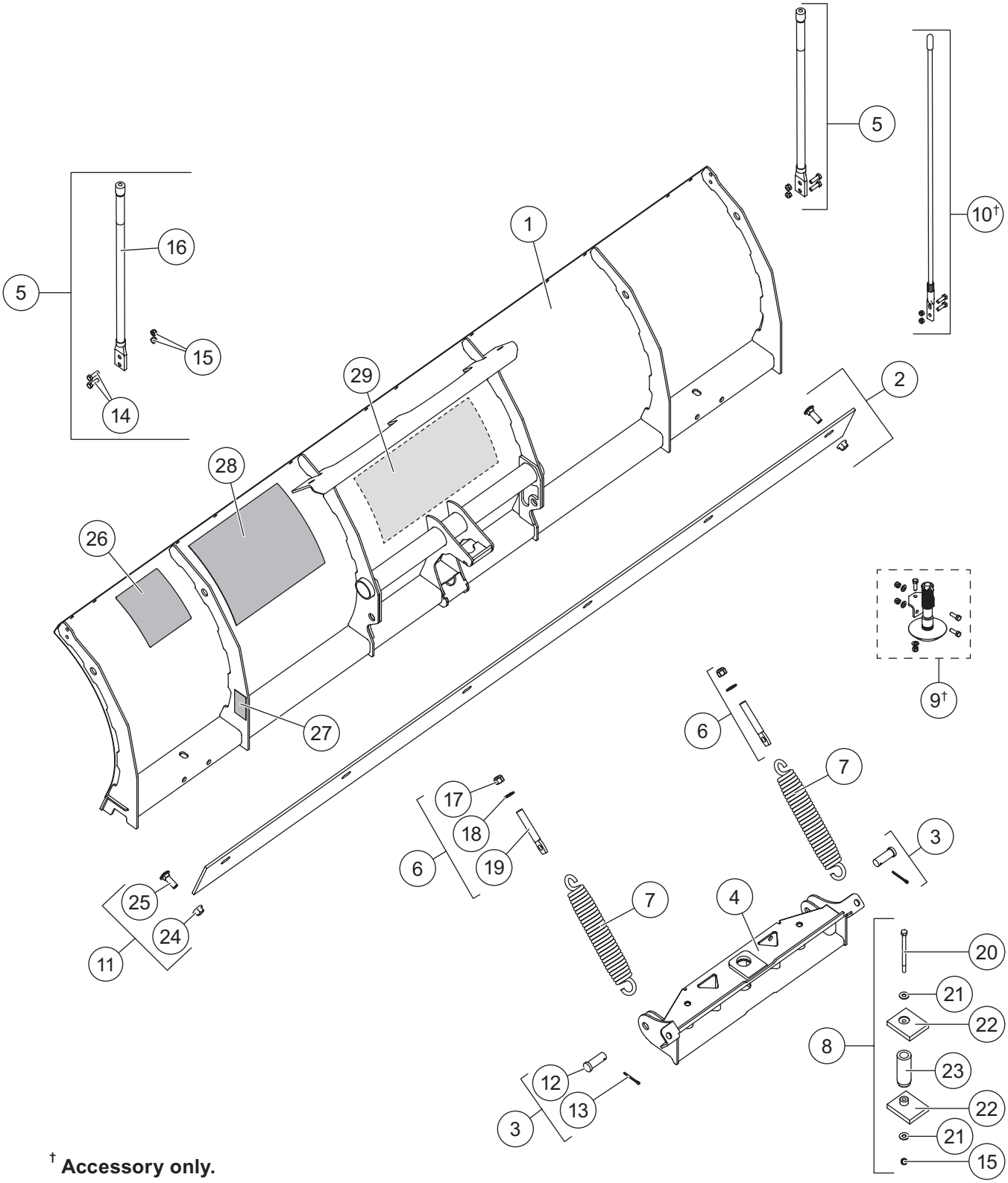

† **Accessory only.**

LIGHT TRUCK BLADE ASSEMBLY

77700/77705 Blade Components							
Item	**Part**	**Qty**	**Description**	**Item**	**Part**	**Qty**	**Description**
1	84554	1	6800LT Blade with Labels	6	84702	2	Eyebolt Kit
	84556	1	7200LT Blade with Labels	7	B61167	2	Trip Spring
2	B61458	1	1/4 Steel Cutting Edge Kit – 6800LT	8	84629	1	Center Pivot Bolt Kit
	B61531	1	1/4 Steel Cutting Edge Kit – 7200LT	9†	84506-1	1	Shoe Assembly Kit – HD, RD, LT
3	84631	2	3/4 x 2 Clevis Pin Kit with Cotter	10†	84477	1	36" Poly Blade Guide Kit
4	84573	1	Quadrant LT	ns	84640	1	Blade Label Kit – LT
5	84525	1	24" Blade Guide Kit	ns†	84524	1	Rubber Deflector Kit – LT
Item 2			**B61458/B61531 1/4 Steel Cutting Edge Kit**				
		1	1/4 Steel Cutting Edge	11	B61255	1	Cutting Edge Bolt Bag
Item 3			**84631 3/4 x 2 Clevis Pin Kit with Cotter**				
12		2	3/4 x 2 Clevis Pin	13		2	5/32 x 1-1/2 Cotter Pin
Item 5			**84525 24" Blade Guide Kit**				
14		4	5/16-18 x 1 Hex Cap Screw G5	16		2	24" Poly Blade Guide with Label
15		4	5/16-18 Hex Locknut GB				
Item 6			**84702 Eyebolt Kit**				
17		1	5/8-11 Hex Locknut GB	19		1	5/8-11 x 4 Eyebolt
18		1	5/8 Hardened Flat Washer				
Item 8			**84629 Center Pivot Bolt Kit**				
15		1	5/16-18 Hex Locknut GB	22	27615	2	Bumper, Personal Plow
20		1	5/16-18 x 5 Hex Cap Screw G5	23		1	Pivot Tube
21		2	5/16 Flat Washer Type A				
Item 11			**B61255 Cutting Edge Bolt Bag**				
24		8	1/2-13 Hex Locknut GB	25		8	1/2-13 x 3-1/4 Carriage Bolt G8
			84640 Blade Label Kit – LT				
26	59900	1	Label – Warning/Caution, Snowplows	28	52204	1	Label – Attach/Detach, Automatixx®
27	29256	1	Label – Warning, Foot Crush	29	77701	1	Label – Logo, LT Blade Center
			ns = not shown				G = Grade

† Accessory only.

A-Frame Components

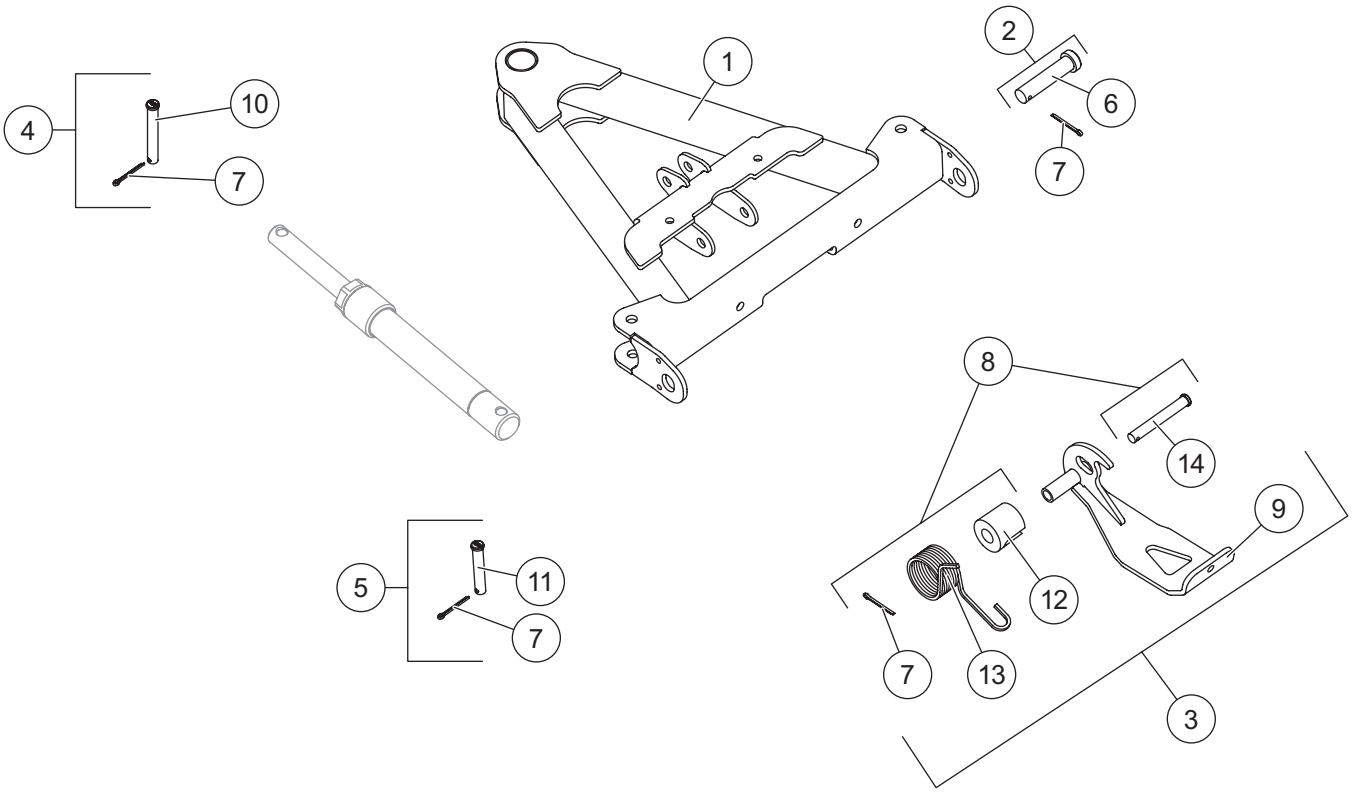

A-FRAME ASSEMBLY

A-Frame Components							
Item	**Part**	**Qty**	**Description**	**Item**	**Part**	**Qty**	**Description**
1	84587	1	A-Frame – LT	4	83629	4	1/2 x 3-11/16 Clevis Pin Kit
2	84618	2	A-Frame Pin Kit	5	85198	1	1/2 x 2-7/8 Clevis Pin Kit
3	84592	1	Stand Kit – LT				
Item 2			**84618 A-Frame Pin Kit**				
6		1	3/4 x 3-1/4 Clevis Pin	7		1	5/32 x 1-1/2 Cotter Pin
Item 3			**84592 Stand Kit – LT**				
8	84615	1	Stand Hardware Kit	9		1	Stand
Item 4			**83629 1/2 x 3-11/16 Clevis Pin Kit**				
7		1	5/32 x 1-1/2 Cotter Pin	10		1	1/2 x 3-11/16 Clevis Pin
Item 5			**85198 1/2 x 2-7/8 Clevis Pin Kit**				
7		1	5/32 x 1-1/2 Cotter Pin	11		1	1/2 x 2-7/8 Clevis Pin
Item 8			**84615 Stand Hardware Kit**				
7		1	5/32 x 1-1/2 Cotter Pin	13		1	Stand Torsion Spring
12		1	Stand Spring Spacer	14		1	1/2 x 3-5/8 Clevis Pin

Headgear Components

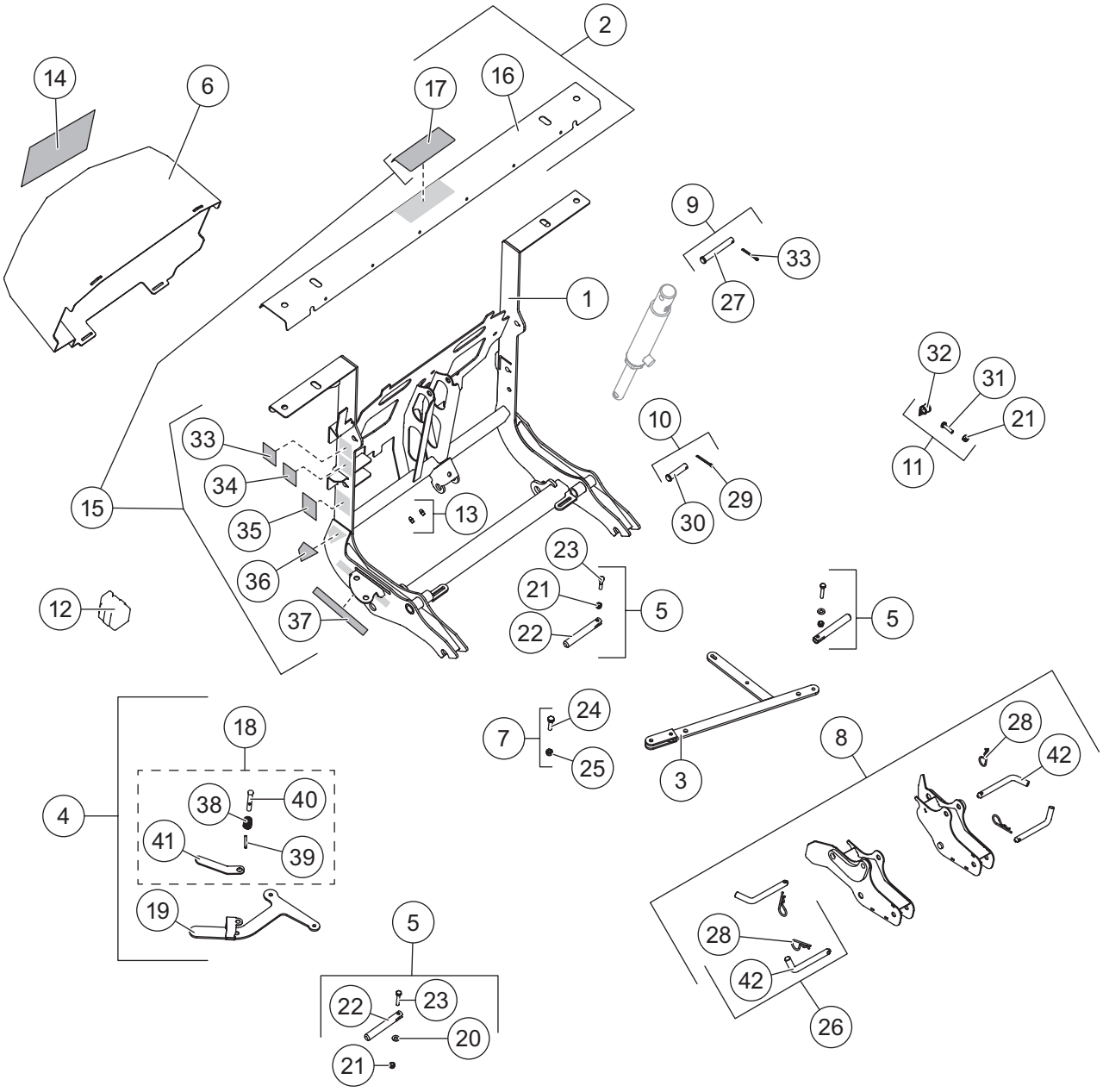

HEADGEAR ASSEMBLY

Headgear Components							
Item	**Part**	**Qty**	**Description**	**Item**	**Part**	**Qty**	**Description**
1	84617	1	Headgear – LT (incl. item 13)	8	84839	1	LT Receiver Kit
2	84619	1	Light Bar Channel – LT	9	85199	1	Lift Ram Base Pin Kit
3	84597	1	Link Arm – LT	10	84627	1	Lift Ram Rod Pin Kit
4	84594	1	Attach Handle Kit – LT	11	84778	1	Clamp Loop Kit
5	84602	3	Hitch Pin Kit	12	61246	1	Cable Boot
6	84648	1	Hydraulic Cover – LT/RD (incl. item 14)	13	84616	1	Grease Zerk (pkg of 3)
				14	43859	1	Label – Information, Hydraulic
7	84635	1	Link Arm/Attach Handle Fastener Kit	15	84646	1	Headgear Label Kit
Item 2			**84619 Light Bar Channel – LT**				
16		1	Light Bar	17	84553	1	Label – Logo, SnowEx® Light Bar
Item 4			**84594 Attach Handle Kit – LT**				
18	84596	1	Attach Handle Release Cam Kit	19	84004	1	Handle
Item 5			**84602 Hitch Pin Kit – LT**				
20		1	1/4 Flat Washer	22		1	Hitch Pin
21		1	1/4-20 Hex Locknut GB	23		1	1/4-20 x 1-1/2 Hex Cap Screw SS
Item 7			**84635 Link Arm/Attach Handle Fastener Kit**				
24		1	5/16-18 x 1-1/4 Hex Cap Screw G5	25		1	5/16-18 Hex Locknut GB
Item 8			**84839 LT Receiver Kit**				
		1	Receiver, DS	26	84610	4	Receiver Pin Kit – LT
		1	Receiver, PS				
Item 9			**85199 Lift Ram Base Pin Kit**				
27		1	1/2 x 2-7/8 Clevis Pin	28		1	1/8 Hairpin Cotter
Item 10			**84627 Lift Ram Rod Pin Kit**				
29		1	5/32 x 1-1/2 Cotter Pin	30		1	1/2 x 2-1/8 Clevis Pin HT
Item 11			**84778 Power Cable Clamp Loop Kit**				
21		1	1/4-20 Hex Locknut GB	32		1	#10 Clamp Loop
31		1	1/4-20 x 1 Hex Cap Screw G5				
Item 15			**84646 Headgear Label Kit**				
17	84553	1	Label – Logo, SnowEx Light Bar	35	69689	1	Label – Logo, SECURITY GUARD™
33	52206	1	Label – Power Switch, Automatixx®	36	77717	1	Label – Upper, Automatixx
34	52207	1	Label – Operation Switch, Automatixx	37	77718	1	Label – Lower, Automatixx
Item 18			**84596 Attach Handle Release Cam Kit**				
38		1	Stand Lock Pin Spring	40		1	Handle Lock Pin
39		1	3/16 x 1-3/8 Roll Pin SS	41		1	Handle Lock Pin Lever
Item 26			**84610 Receiver Pin Kit – LT**				
28		1	1/8 Hairpin Cotter	42		1	1/2 x 4 Hitch Pin
HT = Heat Treated			G = Grade				SS = Stainless Steel

Hydraulic Unit Components

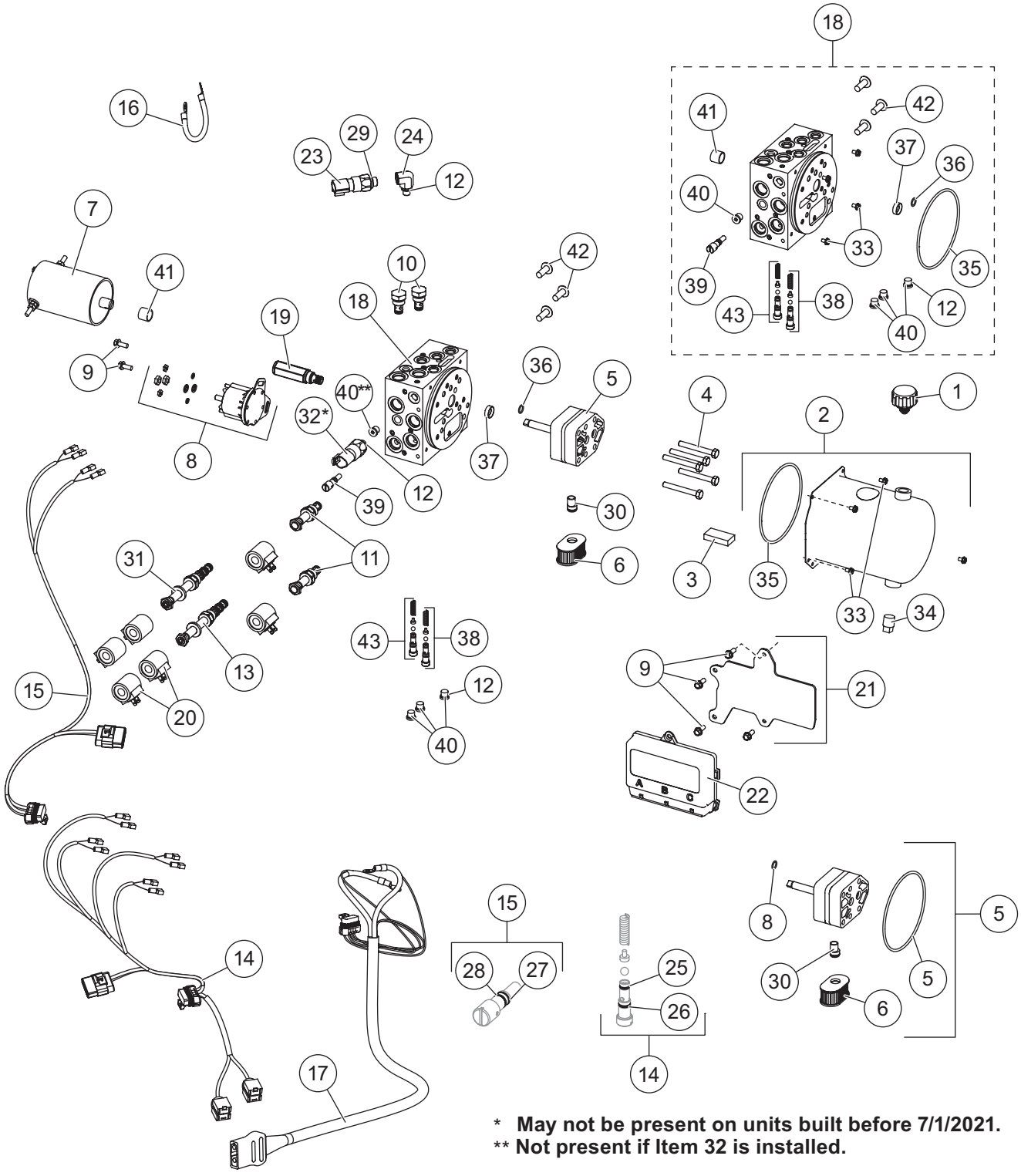

52650 Hydraulic Unit							
Item	**Part**	**Qty**	**Description**	**Item**	**Part**	**Qty**	**Description**
1	48278	1	Breather	17	52291	1	Snowplow Battery Cable
2	52289	1	Reservoir Kit	18	52257	1	Manifold Assembly w/o Valves RD/LT
3	73897	1	Magnet	19	42889	1	Relief Valve 4000 psi
4	90073	5	5/16-18 x 2-1/4 Hex Cap Screw G5	20	52294	6	Coil
ns	52252	1	Seal Repair Tool Kit w/Seal	21	52293-1	1	Plate, Module
5	52287	1	Hydraulic Pump Kit	22	52292-2	1	Module, Plow Control
6	48281	1	Filter	23	84838	1	Pressure Switch
ns	52251	1	Bearing Repair Tool Kit w/Bearing	24	52295	1	Elbow, 90° –4 M ORB/–6 F ORB
7	52299	1	Motor	25	55371	2	O-Ring -008
8	52290	1	Motor Relay Kit, FLEET FLEX System	26	25731	2	O-Ring -010
9	44355	6	1/4-20 x 5/8 Hex Washer-Head	27	48239	1	O-Ring -106
10	84934	2	Check Valve	28	48240	1	Back-Up Ring -106
11	84936	2	Valve, 2-Way NC w/Rev Flow	29	56569	5	O-Ring -906
12	44343	6	O-Ring -904	30	10887	1	Inlet Fitting
13	52285	1	Valve, 4-Way, 3-Position Closed Center	31	84937	1	Valve, 4-Way, 3-Position
				ns		3	Fuse, 5A Mini Automotive-Style (for items 25 and 26)
14	70448	1	Plow Control Harness, 4-Coil				
15	52077	1	Plow Control Harness, 2-Coil	32	83853	1	Pressure Switch (Scrape Maxx™ down-force feature)
16	29071	1	Vehicle Battery Cable 8"				
O-Ring Service Kits							
–	52298-2	–	O-Ring Kit	–	48310	–	Seal Kit, 2-Way Valves
–	48309	–	Seal Kit, 3-Way & 4-Way Valves				
Item 2			**52289 Reservoir Kit**				
33	66607	4	#10-24 x 5/16 Machine Screw	35	66519	1	O-Ring 2-250
34	92079	1	Plug, Square 3/8 NPTF				
Item 18			**52257 Manifold Assembly w/o Valves HD**				
12	44343	5	O-Ring -904	39	48517	1	Quill
33	66607	4	#10-24 x 5/16 Machine Screw	40	44344	4	Plug, Hex Socket –4 M ORB
35	66519	1	O-Ring 2-250	41†	56364	1	Bearing Sleeve
36	56274	1	O-Ring -013	42	98043	3	3/8-16 x 1 Button Cap Screw
37*	66515	1	Pump Shaft Seal	43	52284	1	Relief Valve (1 set)
38	52282	1	Relief Valve (1 set)				
ns = not shown			F = Female	M = Male			G = Grade

* Use 52252 tool to install.

† Use 52251 tool to install.

Go to *www.snowexproducts.com* for hydraulic unit service information and specifications.

Lift and Angle Ram Components

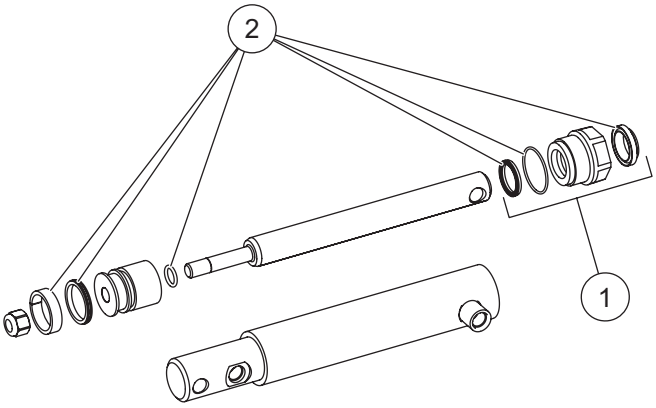

100265 Lift Ram Assembly 1-1/2 x 6 DA (Black) 84430* Lift Ram Assembly 1-1/2 x 6 DA (Red)			
Item	**Part**	**Qty**	**Description**
1	52277	1	1" Gland Assembly
2	52302	1	Seal Kit 1-1/2 DA Ram

* Discontinued

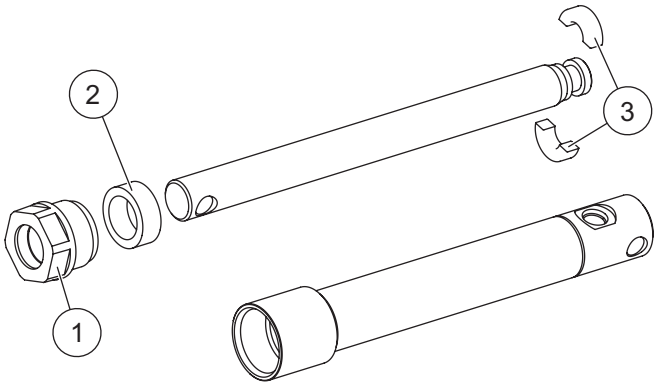

100260 Angle Ram Assembly 1 x 7 (Black) 84426* Angle Ram Assembly 1 x 7 (Red)			
Item	**Part**	**Qty**	**Description**
1	52277	1	1" Gland Nut Assembly
2	56803	1	Spacer
3	52276	1	1" Split Bearing Kit

* Discontinued

Hoses and Fittings

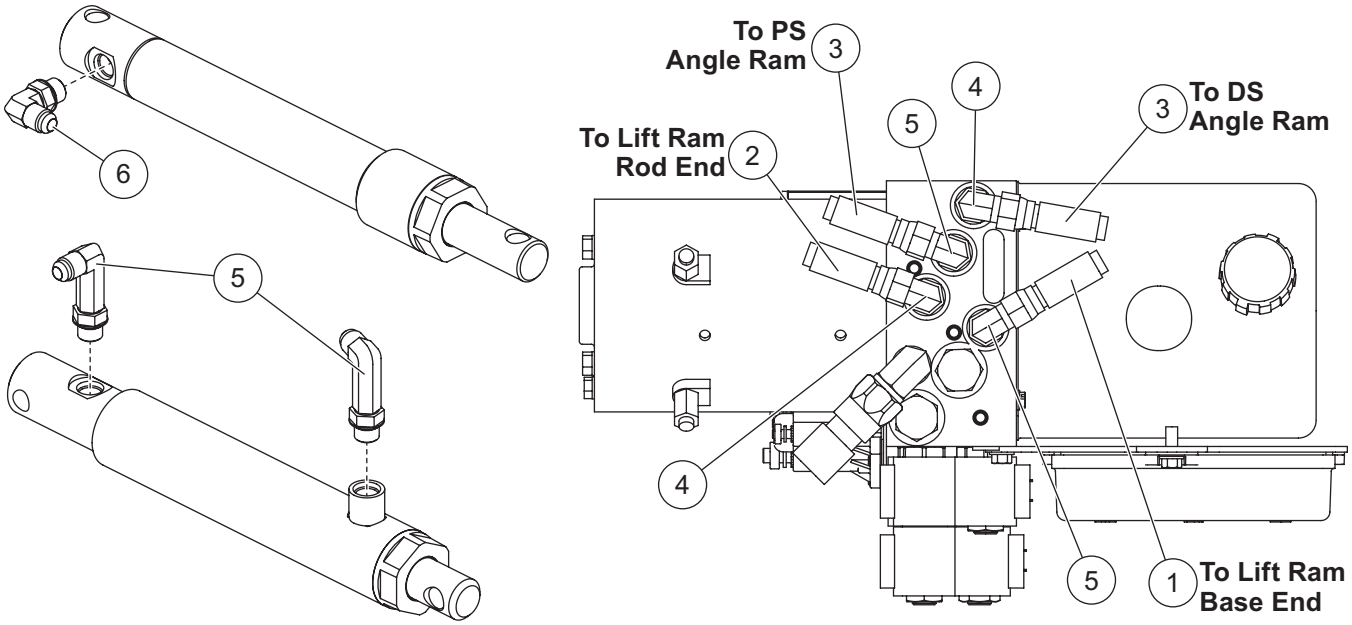

Hoses and Fittings							
Item	**Part**	**Qty**	**Description**	**Item**	**Part**	**Qty**	**Description**
1	84446	1	Hose, 1/4 x 14 w/F JIC Ends	5	40572	4	Elbow, Extra Long 90° –6 M JIC/–6 M ORB
2	84453	1	Hose, 1/4 x 20 w/F JIC Ends				
3	52534	2	Hose, 3/8 x 32 w/F JIC Ends	6	77929	1	Elbow, 90° –6 M JIC/–6 M ORB w/Screen
4	56615-1	2	Elbow, 90° –6 M JIC/–6 M ORB				
				ns	56823	1	Hose Wrap
F = Female			ns = not shown				M = Male

Electrical Components

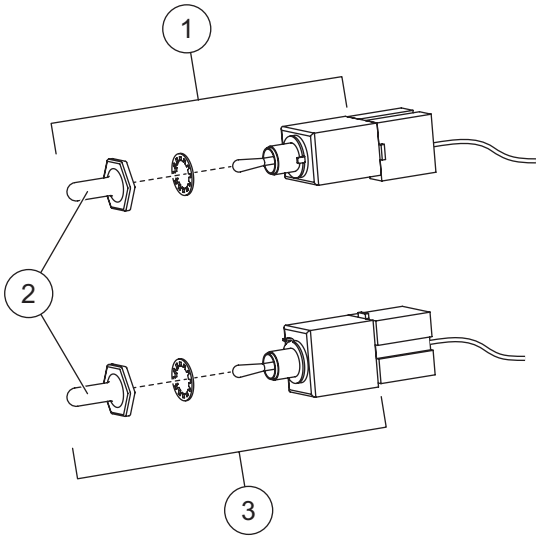

Plow-Side Electrical Components							
Item	**Part**	**Qty**	**Description**	**Item**	**Part**	**Qty**	**Description**
1	40575	1	Toggle Switch (MOM-ON, OFF, ON)	3	40576	1	Toggle Switch (MOM-ON, OFF, MOM-ON)
2	48259	2	Switch Boot				
Vehicle-Side Electrical Components							
*	72527	1	Vehicle Battery Cable	ns	48325	2	Plug Cover
*	28587	1	Vehicle Control Harness				
ns = not shown							

* For diagram see Vehicle-Side Harness Diagram.

Vehicle-Side Harness Diagram

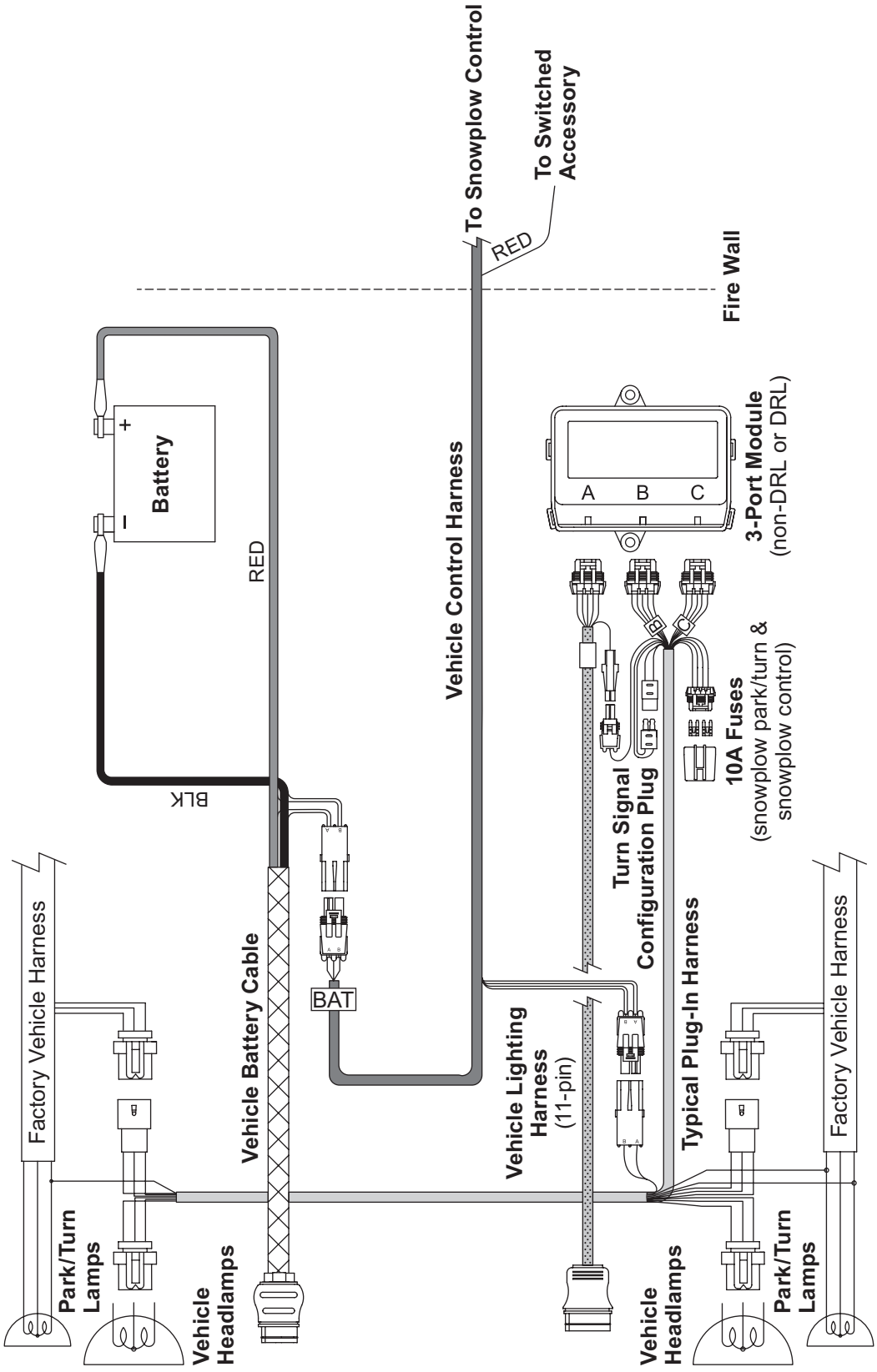

Headlamp Components – Halogen

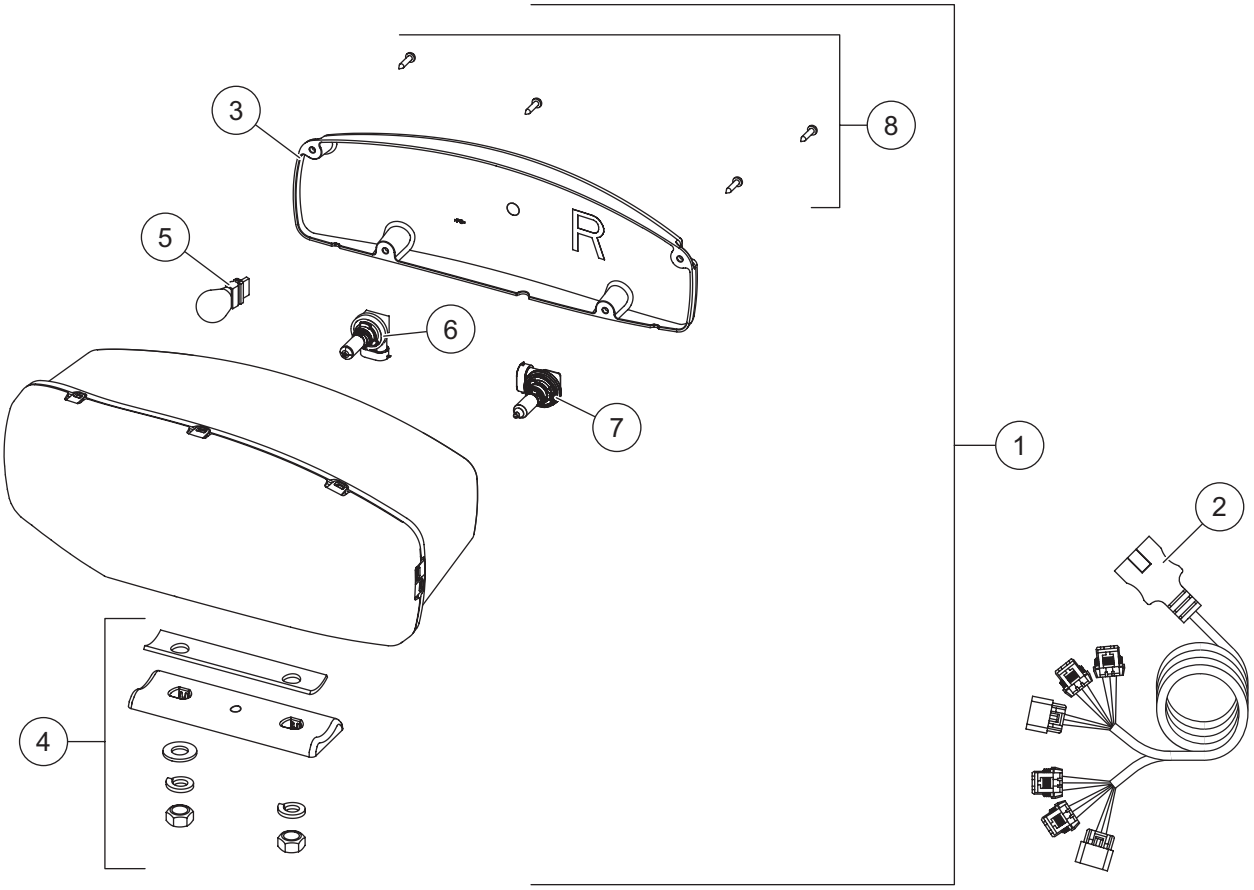

38800 Headlamp Kit H9/H11 (pair)							
Item	**Part**	**Qty**	**Description**	**Item**	**Part**	**Qty**	**Description**
1	38802	1	Headlamp Service Kit H9/H11 – PS	2	38807	1	Harness Service Kit H9/H11
ns	38801	1	Headlamp Service Kit H9/H11 – DS				
Item 1	**38801/38802 Headlamp Service Kit H9/H11 – PS/DS**						
3	38803	1	Rear Cover Kit H9/H11 – PS	6	38811	1	Headlamp Bulb Service Kit H11
ns	38812	1	Rear Cover Kit H9/H11 – DS	7	38809	1	Headlamp Bulb Service Kit H9
4	38804	1	Mounting Hardware Kit H9/H11	8	38808	1	Cover Screws Service Kit H9/H11 (pkg of 4)
5		1	Park/Turn Bulb (trade no. 4157NAK)				
ns = not shown							

Headlamp Kit – LED

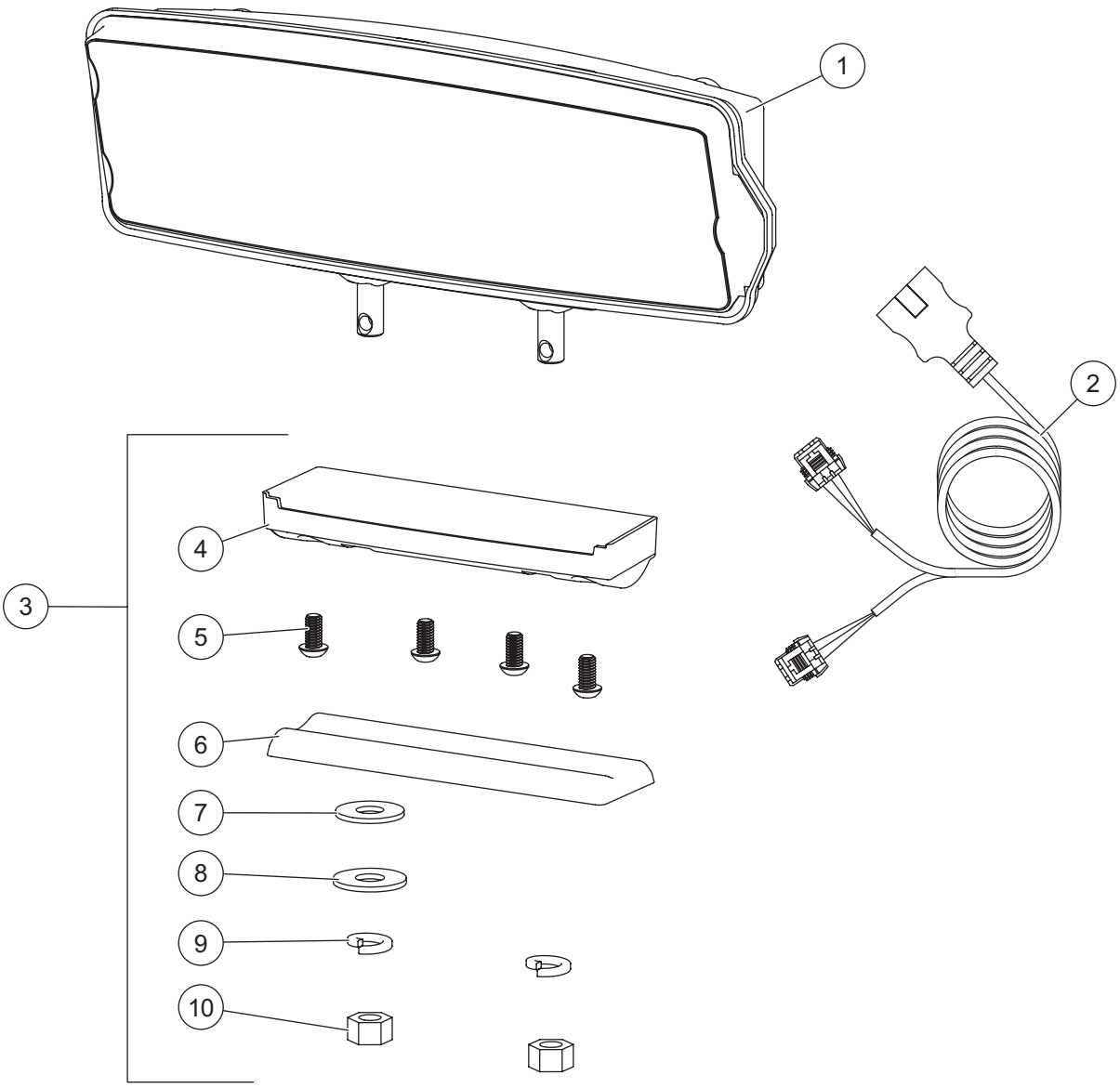

Headlamp Kit LED							
Item	**Part**	**Qty**	**Description**	**Item**	**Part**	**Qty**	**Description**
1	39901	1	Headlamp Service Kit LED – DS	3	39903	1	Mounting Hardware Kit LED
ns	39902	1	Headlamp Service Kit LED – PS	ns	72512	1	LED Harness Connector Cover (pkg of 2)
2	72548	1	Harness Service Kit LED				
Item 3			**39903 Mounting Hardware Kit LED**				
4		1	Plastic Casing	8		1	1/2 Flat Washer
5		4	1/4 Button Cap Screw	9		2	1/2 Lock Washer
6		1	Headlamp Swivel	10		2	1/2 Hex Nut
7		1	1/2 Rubber Washer	ns		1	Metal Insert
ns = not shown							

TrynEx International, LLC
531 Ajax Drive
Madison Heights, MI 48071-2429
www.snowexproducts.com

A DIVISION OF DOUGLAS DYNAMICS, LLC

Copyright © 2026 Douglas Dynamics, LLC. All rights reserved. This material may not be used, reproduced, or copied in any manner, in whole or in part, in any printed, mechanical, electronic, film, or other distribution and storage media, nor analyzed or manipulated in any manner for the purpose of training artificial intelligence technologies or systems, without the written consent of TrynEx International, LLC. In accordance with Article 4(3) of the Digital Single Market Directive 2019/790, TrynEx International expressly reserves this work from the text and data mining exception. Authorization to photocopy items for internal or personal use by TrynEx International outlets or equipment owner is granted.

TrynEx International reserves the right under its product improvement policy to change construction or design details and furnish equipment when so altered without reference to illustrations or specifications used. TrynEx International or the vehicle manufacturer may require or recommend optional equipment for snow removal. Do not exceed vehicle ratings with a snowplow. TrynEx International offers a limited warranty for all equipment and accessories. See separately printed page for this important information. The following are registered (®) or unregistered (™) trademarks of Douglas Dynamics, LLC: Automatixx®, Scrape Maxx™, SECURITY GUARD™, SnowEx®.

Printed in U.S.A.